NGK
IGNITION COIL



SPECIALISTS IN IGNITION TECHNOLOGY.

IGNITION
PARTS

IGNITION
PARTS

NGK IGNITION COIL
NOW AVAILABLE IN MIDDLE EAST

If you're looking for products relating to ignition, NGK will be the reliable partner at your side. No matter what country you are operating in – we're there for you.

As standard, a car battery delivers 12 Volts. To produce an ignition spark on the spark plug, however, up to 40,000 Volts are required. Therefore, ignition coils are needed: they transform the small voltage from the car battery into a voltage pulse in the double-digit Kilovolt range.

Over the years, ignition coils have had to adapt to rising technical demands through new engine concepts. Today's designs combine maximum reliability with top performance – even under the extreme operating conditions of a downsizing engine.

THE SUCCESS FACTORS OF NGK IGNITION COILS:

- 80 YEARS' EXPERIENCE AND **MARKET-LEADING EXPERTISE**
- NGK OFFERS THE **ENTIRE IGNITION PROCESS** FROM ONE SOURCE
- **PROVEN QUALITY** FROM A LEADING TECHNOLOGY PARTNER OF THE VEHICLE MANUFACTURERS
- **CLEVER** NUMBERING SYSTEM
- IGNITION COILS WITH MODERN AND CLASSIC DESIGNS
- **TOP AVAILABILITY**, RAPID AND ERROR -FREE DELIVERY
- SERVICE **TAILORED** TO YOU, WITH **PERSONAL CONSULTATION** AND **EFFECTIVE** SALES SUPPORT



LEADING TECHNOLOGY.
FOR THE LEADING BRANDS.

The time has come to shape your shopping experience more efficiently. With the range of ignition coils offered at NGK, you will find an ignition coil for almost any vehicle, all from one supplier!

OPEL/VAUXHALL
SEAT
TOYOTA
PEUGEOT
MERCEDES-BENZ
RENAULT
VOLVO
NISSAN
FORD
AUDI
ŠKODA
VW
ALFA ROMEO
CITROËN
FIAT
BMW



You will reap the following benefits:

> NGK is the world's leading manufacturer of spark plugs, glow plugs and lambda sensors.

> As a specialist in ignition and sensor technology, NGK has developed an excellent reputation over many years and is highly credible amongst workshops and in the trade.

> On the aftermarket, NGK is a complete supplier for every step of the ignition process – with ignition coils, spark plugs and ignition cables of uncompromising quality.

IGNITION PARTS

CLEVER ARTICLE NUMBERS.
THE SYSTEM.

The ignition coil range at NGK has a simple numbering system. It is both unique and useful, and consists of six categories: U1 – U6. Each represents a particular type of coil.

The category gives an indication of the number of ignition coils required for a vehicle. The customer can therefore be provided with targeted advice on the costs of a complete exchange. In addition, the category also shows how many ignition cables a customer might need.

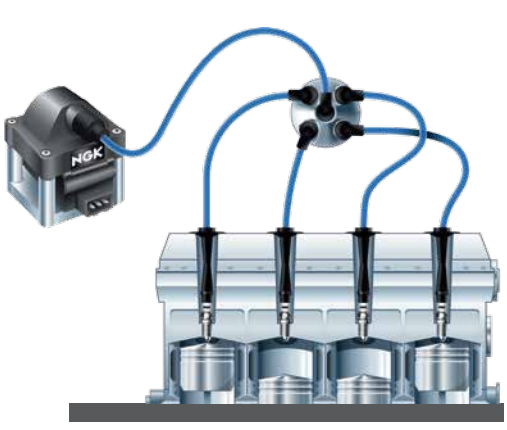

U **1**000
Distributor ignition coils

Ignition coils for vehicles with mechanical ignition distributors.

One ignition coil supplies the spark plug with voltage over the distributor.

The number of ignition cables matches the number of spark plugs. In addition, one cable to the distributor is needed.

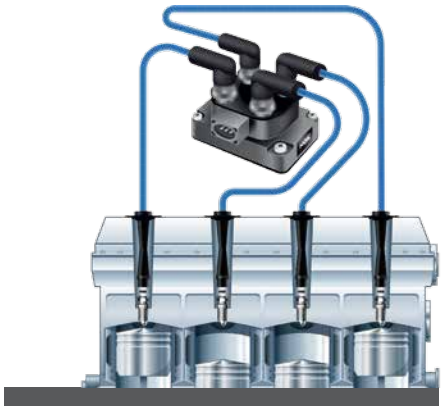

U **2**000
Block ignition coils

Block ignition coils – one or more required, depending on the vehicle.

A block ignition coil feeds several spark plugs. As a rule, one ignition coil per cylinder head is needed.

The number of ignition cables matches the number of spark plugs.

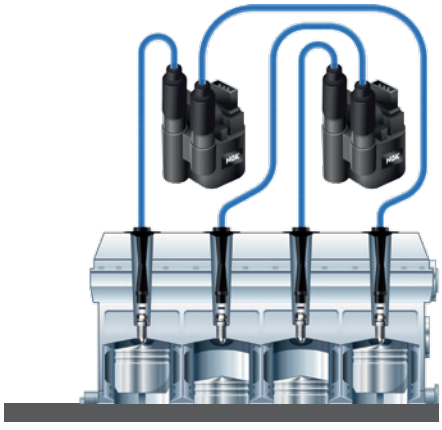

U **3**000
Block ignition coils with two high-voltage outlets

A different number of block ignition coils, depending on the application.

One ignition coil supplies two spark plugs with a spark at the same time.

The number of ignition cables matches the number of spark plugs.

Each article number is comprised as follows

U	1	000
NGK ignition coil	Category	Consecutive number

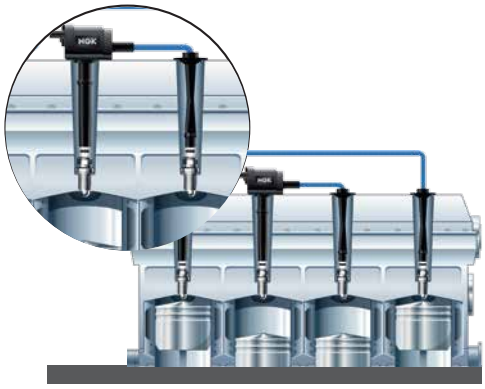

U **4**000

Pencil coil with dual spark technology

One plug or pencil ignition coil for two spark plugs.

One ignition coil supplies two spark plugs at the same time. The coil plugs directly into the first spark plug.

One ignition cable per coil is required.

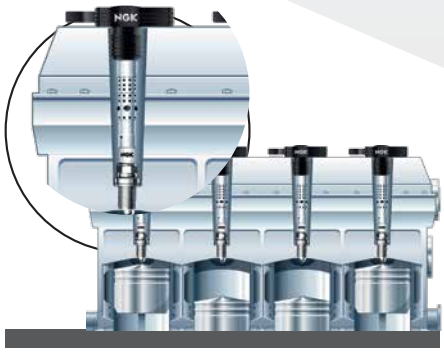

U **5**000

Pencil coil with single spark technology

One plug or pencil ignition coil for every cylinder.

One ignition coil is connected for every cylinder.

No ignition cables are required.



U **6**000

Ignition coil systems

Individual ignition coil per cylinder in one complete system.

A pooled ignition coil system that supplies only the spark plugs with voltage.

As a rule, no ignition cables are required.

PACKAGING WITH ADDED VALUE:
EFFICIENT AND SELF-EXPLANATORY TO THE SMALLEST DETAIL!

As the article number of an NGK ignition coil makes things easier for workshops and for the trade, the packaging, with its intelligent product label, also helps the ordering process and vehicle service run smoothly and quickly.



The benefits at a glance:

- The NGK ignition coil range comes in just twelve pack sizes, making logistics and provisioning more simple.
- The label on the packaging shows the easy-to-scan bar code, the article number and the »U-number«.
- The »U-number« provides information on the type of ignition coil and the number of ignition coils and cables that may be required (for more detailed information, see pages 4–5).
- At the same time, the label contains a pictogram corresponding to the ignition coil in the packaging. No other manufacturer on the market can currently offer this!
- The benefits for you: Thanks to the pictogram, it is easy to assign the ignition coil before the actual ignition coil exchange.
- The pictogram allows the workshop to compare the coil to be replaced with the coil provided, without damaging the packaging seal or opening the package.

NGK IGNITION COIL
CROSS REFERENCE

Honda ⇨ NGK	
30500634015	U1079
30500634632	U1056
30500634671	U1056
30500634672	U1056
30500659005	U1056
30500P01005	U1015
30500P0AA01	U1020
30500P0HA01	U1020
30500PAAA01	U1020
30500PCA003	U1020
30500PDAE01	U1020
30500PM3005	U1015
30500PM3015	U1015
30500PM5A02	U1016
30500PM5A03	U1016
30500PR4A02	U1017
30500PR4A03	U1017
30500PT0005	U1015
30510P73A01	U1004
30510P73A02	U1004
30510PT2006	U1004
30520P8EA01	U5051
30520P8FA01	U5051
30520P8FA02	U5051
30520PDFE00	U2006
30520PDFE11	U5085
30520PDKA01	U5051
30520PGKA01	U5051
30520PHM003	U5223
30520PHMS01	U5223
30520PNA007	U5099
30520PNC004	U5064
30520PR7A03	U5324
30520PT3A02	U1075
30520PVFA01	U5051
30520PVJA01	U5051
30520PWA003	U5097
30520PWA013	U5097
30520PWAS01	U5097
30520RAA007	U5099
30520RB0003	U5134
30520RB0013	U5134
30520RB0S01	U5134
30520RBJ003	U5225
30520RBJ0031	U5225
30520RBJ013	U5225
30520RBJ0130	U5225
30520RBJS01	U5225
30520RBJS010	U5225
30520RCAA01	U5051
30520RCAA02	U5051
30520RDJA01	U5051
30520REAZ01	U5097
30520RNAA01	U5081
30520RRA007	U5099
30521PR7A03	U5325
30521PWA003	U5098
30521PWAS01	U5098
30521RBJ003	U5239
30521RBJ013	U5239
30521RBJS01	U5239
30521RLB003	U5098
Hyundai/ KIA ⇨ NGK	
273002E000	U5321
2730039000	U4023
2730039000	U4023
2730039050	U4023
2730039050	U4023
2730039700	U4022
2730039700	U4022
2730039800	U4030
2730102100	U2066
2730102502	U1037
2730102600	U2039
2730102620	U2039
2730102630	U2039
2730102700	U2063
2730102710	U2063
2730103110	U5310
2730104000	U5316
2730122040	U2040
2730122050	U2040
2730122600	U2048
2730122610	U2048
2730123003	U2035
2730123500	U2036
2730123510	U2036
2730123700	U2051
2730123710	U2051
2730123900	U2075
2730124510	U1022
2730124520	U1022
2730126080	U2059
2730126600	U2060
2730126640	U5073
2730126640	U5073
2730132800	U1034
2730132810	U1034
2730132820	U1034
2730133010	U2042
2730133020	U2042
2730133510	U2067
2730133520	U2067
2730137100	U2076
2730137110	U2052
2730137120	U2052
2730137150	U2077
2730138020	U4006
2731002620	U2039
2731002630	U2039
2731021020	U1076
2731022000	U1022
2731024000	U1022
273013E100	U5074
0K01118100	U2006
0K01318100	U4020
0K2011810XB	U1059
0K2011810XC	U1059
0K24718100A	U4021
0K2A318100A	U4019
0K30A1810X	U2064
0K30E1810X	U2061
0K30E1810XZ	U2061
0K9A21810XB	U1182
0K9BV1810X	U2054
273003F100	U5314
273012B000	U5072
273012B010	U5067
273012B100	U5317
273013C000	U5087
273013E400	U5088
New Era ⇨ NGK	
MIC-2001	U5313
MIC-2003	U1024
MIC-2022	U1043
MIC-2023	U1033
MIC-2024	U1004
MIC-2025	U1020
MIC-2027	U2018
MIC-2028	U2001
MIC-2029	U2005
MIC-2030	U1014
MIC-2031	U2031
MIC-2032	U2065
MIC-2033	U2009
MIC-2034	U3018
MIC-2035	U1018
MIC-H3014	U5099
MIC-H3016	U5081
MIC-H3017	U5051
MIC-H3021	U5097
MIC-H3022	U5098
MIC-H3036	U5134
MIC-H3056	U5051
MIC-H3057	U5239
MIC-M3019	U5311
MIC-M3027	U4027
MIC-M3028	U4014
MIC-M3032	U4027
MIC-M3041	U5101
MIC-N3018	U5032
MIC-N3020	U5043
MIC-N3029	U5061
MIC-N303	U5123
MIC-N3030	U5036
MIC-N3031	U5119
MIC-N3035	U5123
MIC-N3047	U5128
MIC-N3058	U5119
MIC-N3060	U5007
MIC-N3062	U5070
MIC-N3063	U5071
MIC-S3012	U4008
MIC-T3001	U5027
MIC-T3002	U5090
MIC-T3003	U5029
MIC-T3004	U5086
MIC-T3005	U5052
MIC-T3006	U5068
MIC-T3007	U5146
MIC-T3008	U5145
MIC-T3009	U5065
MIC-T3010	U5100
MIC-T3011	U5084
MIC-T3037	U5076
MIC-T3044	U5030
MIC-T3053	U5077
MIC-T3065	U5029
MIC-X3025	U5075
MIC-X3026	U5087
MIC-X3038	U5002
MIC-X3051	U5073
MIC-X3052	U5321
MIC-X3066	U4006
MIC-X3067	U5182
MIC-X3068	U5082
MIC-Z3043	U5063
MIC-Z3046	U5326
MIC-Z3054	U4011
MIC-Z3055	U4015
Suzuki ⇨ NGK	
3341077E10	U5095
3341077E11	U5095
3341077E20	U5092
3341077E21	U5092
3341077E22	U5092
3340051K10	U5309
3340062J00	U4008
3340065G00	U4008
3340065G01	U4008
3340065G02	U4008
3340078J02	U5130
3340078J03	U5130
3341056B10	U1040
3341057B10	U1038
3341057B10000	U1038
3341066D00	U4010
3341066D01	U4010
3341080C10	U1038
3341080C1000	U1038
Toyota ⇨ NGK	
297007942	U4029
1907074170	U1043
1950074040	U1018
1950074050	U1045
1950074090	U1043
1950074091	U1043
1950074100	U1043
9008019008	U3018
9008019012	U4024
9008019015	U5029
9008019016	U5100
9008019017	U5030
9008019019	U5029
9008019021	U5027
9008019027	U5065
9091902004	U1079
9091902006	U1056
9091902007	U1079
9091902008	U1079
9091902013	U1079
9091902014	U1079
9091902015	U1079
9091902016	U1079
9091902017	U1079
9091902019	U1079
9091902020	U1079
9091902026	U1079
9091902027	U1079
9091902030	U1079
9091902031	U1079
9091902042	U1056
9091902043	U1079
9091902058	U1079
9091902102	U1068
9091902111	U1056
9091902137	U1068
9091902163	U1014
9091902164	U1013
9091902185	U1091
9091902197	U1018
9091902208	U1018
9091902209	U1043
9091902212	U4016
9091902213	U4029
9091902215	U4024
9091902217	U3018
9091902218	U3018
9091902220	U3018
9091902226	U3018
9091902229	U5027
9091902230	U5065
9091902234	U5100
9091902237	U5086
9091902238	U5068
9091902239	U5029
9091902240	U5027
9091902243	U5052
9091902244	U5052
9091902246	U5146
9091902247	U5090
9091902248	U5090
9091902250	U5084
9091902251	U5076
9091902252	U5145
9091902255	U5076
9091902256	U5084
9091902257	U5084
9091902258	U5145
9091902260	U5090
9091902262	U5029
9091902265	U5027
9091902266	U5052
9091919023	U5052
90919A2001	U5090
90919A2002	U5076
90919A2003	U5084
90919A2004	U5076
90919A2005	U5084
90919A2006	U5090
90919A2007	U5076
90919C2006	U5090
90919T2002	U5029
90919T2006	U5029
90919T2008	U5090
90919W2002	U5027
YEC ⇨ NGK	
IGC101A	U5100
IGC102A	U5084
IGC103A	U5027
IGC104A	U5029
IGC105A	U5086
IGC106A	U5052
IGC107A	U5065
IGC108A	U5090
IGC109A	U5068
IGC201A	U5032
IGC202A	U5126
IGC203A	U5113
IGC204A	U5061
IGC205A	U5043
IGC601A	U5051
IGC602A	U5051
IGC603A	U5099
IGC604A	U5081
IGC802A	U4008

Disclaimer: This chart is furnished as a purpose of guide & information only. Please refer to Product Catalogue for details.

INTRODUCING TekniWiki.com



NGK | NTK open technical information portal

- » Interactive learning modules
- » Technical videos and articles
- » Free of charge, no registration
- » Technical installation tips & tricks
- » Product catalogues
- » NGK | NTK product news

Find our YouTube channel here:
youtube.com/NGKsparkplugEurope

NGK SPARK PLUGS | NTK TECHNICAL CERAMICS

NGK SPARK PLUG MIDDLE EAST FZE

Plot # S-30205, Jebel Ali Free Zone - South,
P.O. Box: 17859, Dubai, United Arab Emirates.
Tel: +971 4 880 7244, Fax: +971 4 880 7255

www.ngkntk.ae | www.tekniwiki.com | info@ngkntk.ae | ngkntkME